Hercules

Push Pull Brace

Hercules Brace Position Range

Model	Closed Position	Middle Position	Fully Extended	Test No.	Mass (kg)
HERCULES 1 ™	2.5 meters 100kN	3.0 meters 100kN	3.5 meters 100kN	M169	110kg
HERCULES 2 ™	4.6 meters 100kN	6.0 meters 100kN	7.5 meters 80kN	M168	185kg
HERCULES 3 ™	6.5 meters 100kN	9.0 meters 75kN	11.0 meters 35kN	M167	260kg

Note: Braces have been tested to Australian Standard AS 3850 - 2015.

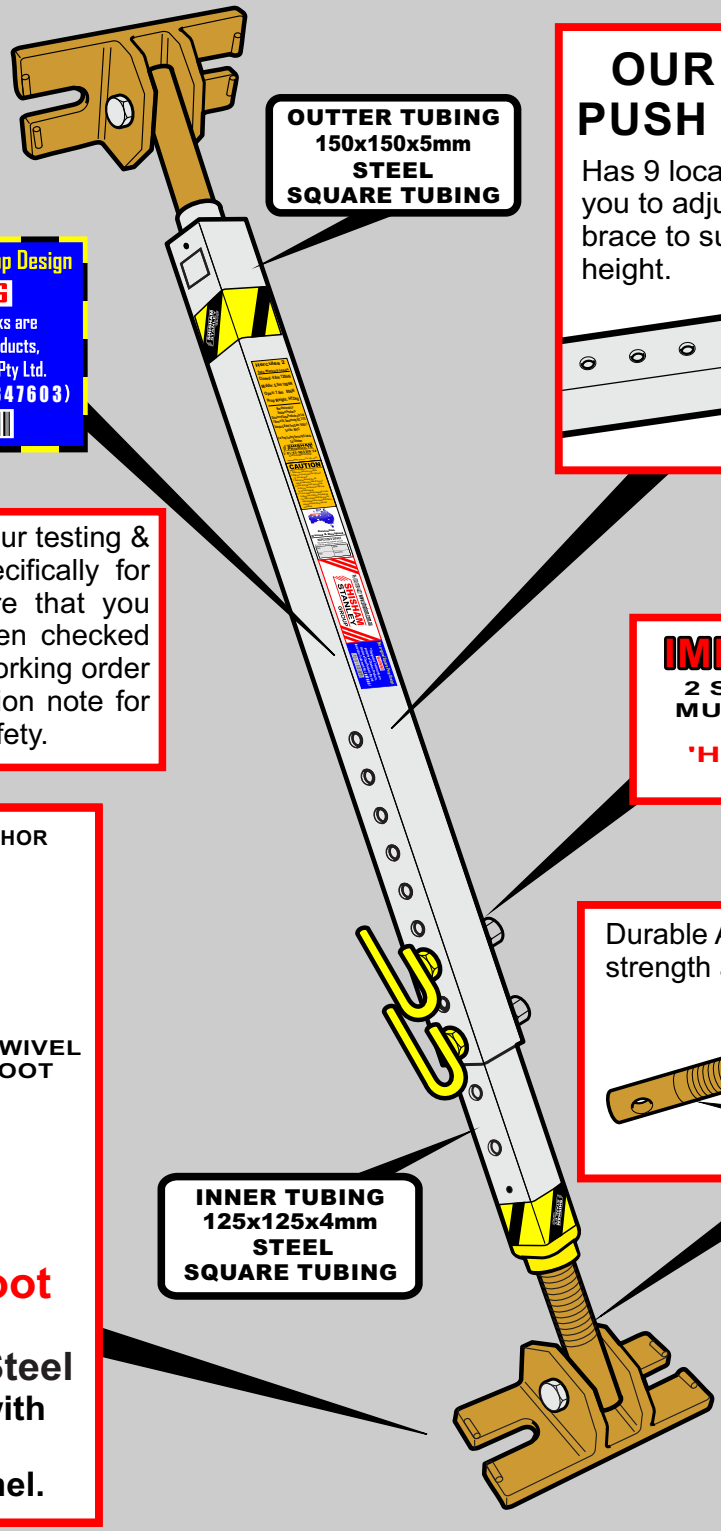

The original Square Prop Design

WARNING

™ Designated Trademarks are property of Shisham Products, division of SupaProducts Pty Ltd.
Australian Trade mark No: (847603)

OUR HERCULES PUSH PULL BRACE

Has 9 location holes to enable you to adjust the length of your brace to suit the concrete panel height.

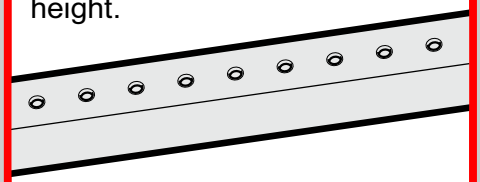

We have designed our testing & service stickers specifically for our brace to ensure that you know they have been checked and are in perfect working order with a detailed caution note for your knowledge & safety.

IMPORTANT

2 SHEAR PINS MUST BE USED ON ALL 'HERCULES' BRACES

Durable Acme Thread for extra strength and usability

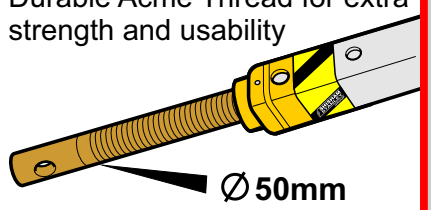

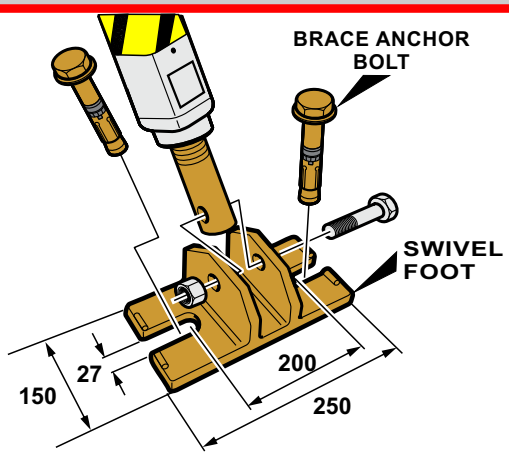

Dual Bolt Swivel Foot

16mm Grade

Grade 350 Structural Steel

Use with M24 Ferrules with Grade 8.8 bolts at 200mm centres in panel.